COOLMAR®
HVAC & R MARINE SYSTEM

# OUR QUALITY POLICY

Air conditioning is a process which heats, cools, cleans and cycles the air and it continuously controls the humidity content of the environment. Today it is seen that humans give great importance to air conditioning systems and their qualities in order to live more conveniently and efficiently. Our firm which performs activities on marine HVAC systems follows closely the continuously changing air – conditioning, ventilation and heating technologies and with the procurement of design, project engineering, site installation, application, commissioning and all spare parts, we present HVAC systems which became an inseparable part of ships and yachts to our customers by targeting mainly the comforting conditions. Yachts, commercial ships, vessels, ferries, passenger boats and torpedo boats giving military service are our working fields. Our projects are planned with years of experience and by our expert staff. HVAC system productions are supported by high technologies using our own software. The systems are designed by being sensitive to the human and environmental health and giving great importance to our purpose of low energy usage and maximum efficiency. We establish systems which have integrated our special productions designed for our customers needs. We support technical documents, all engineering drawings to our customers.

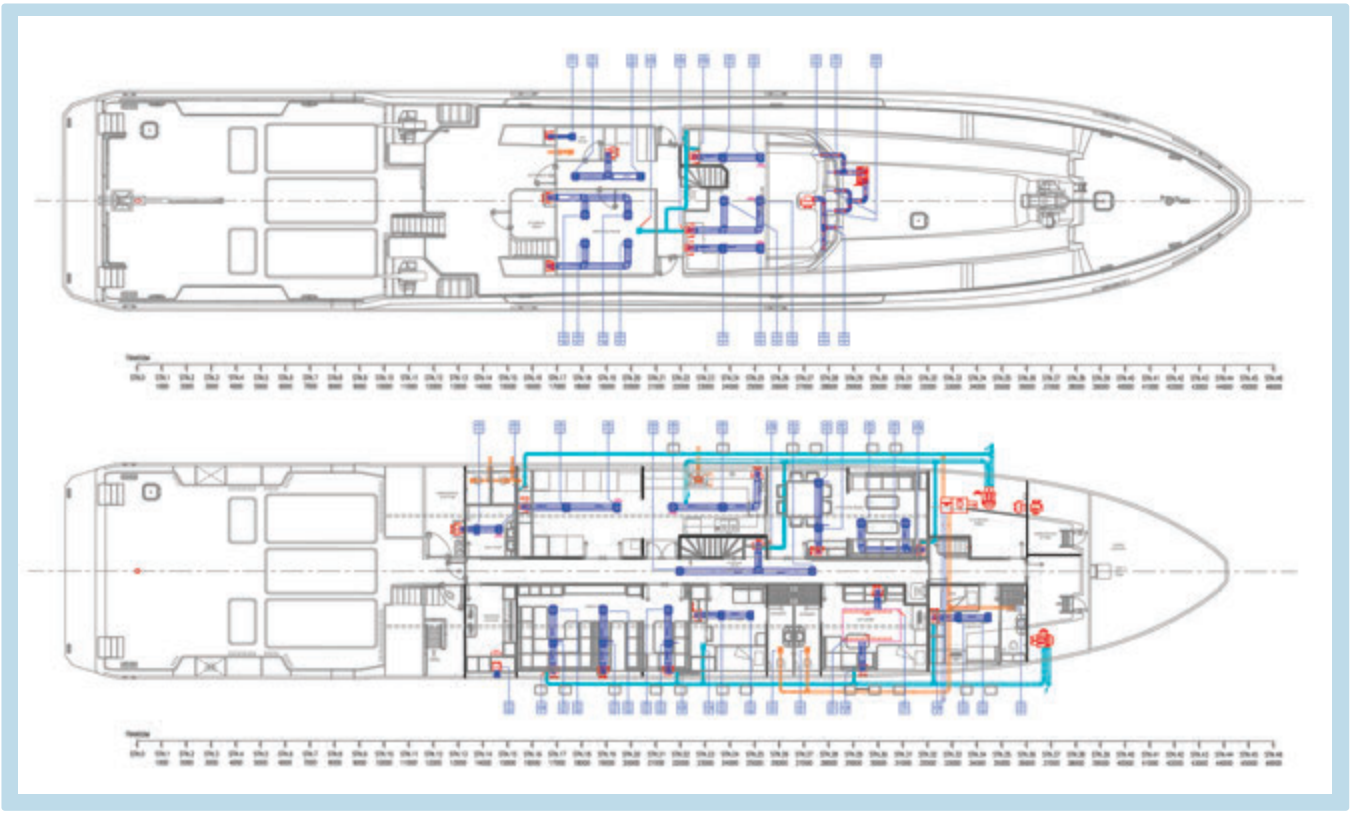

# MAP SERIES

MAP 005

MAP 24

## SELF CONTAINED

### TECHNICAL SPECIFICATIONS

| SYSTEM | | | HEAT PUMP | | | | | | | | | | |
|---|---|---|---|---|---|---|---|---|---|---|---|---|---|
| MODEL | | | MAP | | | | | | | | | | |
| CAPACITY | | | 005 | 008 | 010 | 012 | 015 | 018 | 020 | 024 | 028 | 032 | 036 |
| Power Supply | | | 220-240 / 1 Ph / 50 Hz | | | | | | | | | | |
| Cooling Capacity | | Btu/h | 4,600 | 7,500 | 9,500 | 12,200 | 15,000 | 18,200 | 20,000 | 24,600 | 28,000 | 31.300 | 35.800 |
| Heating Capacity | | Btu/h | 4,900 | 7,600 | 9,700 | 12,600 | 15,800 | 18,700 | 20,300 | 25,000 | 28,800 | 32.000 | 37.000 |
| Power Consumption | | W | 550 | 690 | 736 | 943 | 1196 | 1357 | 1426 | 1725 | 1955 | 2254 | 2645 |
| Operating Current | | A | 2.5 / 3.0 | 3.0 / 3.9 | 3.1 / 4.2 | 4.1 / 5.4 | 5.2 / 6.8 | 5.9 / 7.7 | 6.2 / 8.1 | 7.5 / 9.3 | 8.5 / 10.5 | 9.8 / 12.4 | 11.5 / 13.8 |
| Duct Diameter | | mm | 100 | 125 | 125 | 125 | 150 | 180 | 180 | 180 | 180 | 2x150 | 2x180 |
| Refrigerant-Control | | | | R-134A / R 410 A / R-22 / R-407C HFC - Capillary Tube | | | | | | | | | |
| DIMENSIONS (mm) | | Height | 280 | 320 | 320 | 340 | 370 | 370 | 420 | 420 | 420 | 500 | 500 |
| | | Lenght | 460 | 430 | 430 | 480 | 525 | 545 | 595 | 595 | 645 | 750 | 850 |
| | | Width | 270 | 270 | 270 | 270 | 320 | 320 | 335 | 335 | 430 | 525 | 525 |
| Weight | | Kg | 18 | 22 | 23 | 28 | 37 | 39 | 39.5 | 46 | 49 | 76 | 87 |
| Air Flow | | m3/h | 250 | 330 | 380 | 480 | 620 | 750 | 850 | 1,050 | 1000 | 1300 | 1500 |
| Fan Motor | | W | 80 | 110 | 115 | 180 | 180 | 195 | 250 | 300 | 300 | 360 | 390 |
| Pipe | Condenser | inch (mm) | 5/8"(15) | 3/4"(19) | | | | | | | | | |
| Dimension | Drainage | inch (mm) | 5/8"(15) | | | | | | | | | | |
| Condenser Water Flow | | Lt/min | 8 | 10 | 11 | 13 | 15 | 18 | 20 | 22 | 25 | 35 | 42 |

COOLING Internal conditions : 19.5°C / 27°C (YT/KT) EXTERNAL CONDITIONS (Water °C) : 28°C
HEATING Internal conditions : 16°C / 22°C (YT/KT) EXTERNAL CONDITIONS (Water °C) : 8°C

Technical Specifications and sizes to change without notice.

# MAF - C SERIES

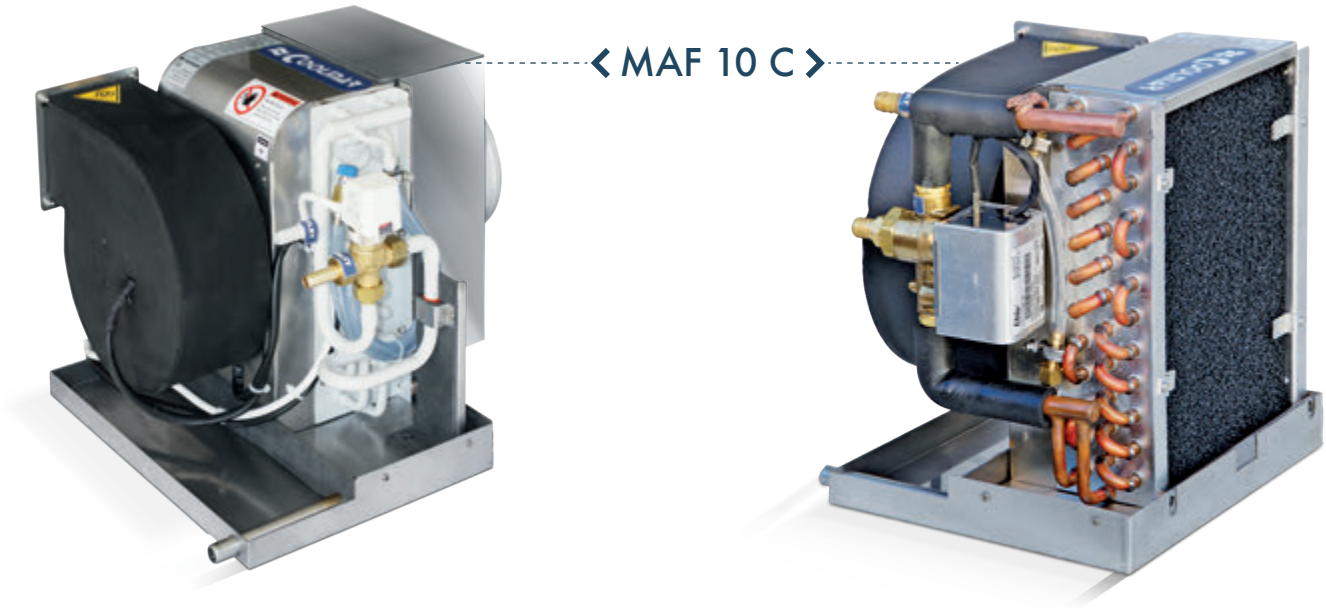


FANCOIL COMPACT

## TECHNICAL SPECIFICATIONS

| MODEL | MAF | | | | | | | | | |
|---|---|---|---|---|---|---|---|---|---|---|
| CAPACITY | 004 | 008 | 010 | 012 | 016 | 020 | 024 | 028 | 032 | 036 |
| Capacity (Btu/h) | 4,000 | 7,500 | 9,700 | 12,500 | 16,000 | 20,000 | 24,000 | 28,000 | 32,000 | 36,000 |
| Capacity (Kcal/h) | 1,010 | 1,894 | 2,449 | 3,157 | 4,040 | 5,051 | 6,061 | 7,071 | 8,081 | 9,091 |
| Power Supply | 220-240V / 1Ph / 50Hz | | | | | | | | | |
| Power Consumption (Watt) | 80 | 115 | 115 | 180 | 180 | 250 | 300 | 300 | 360 | 390 |
| Operating Current (A) | 0.3 | 0.4 | 0.5 | 0.7 | 0.8 | 0.9 | 1.1 | 1.2 | 1.6 | 2.4 |
| Air Flow (m3/h) | 250 | 330 | 375 | 480 | 620 | 750 | 950 | 1000 | 1300 | 1500 |
| Duct Diameter (mm) | 100 | 125 | 125 | 125 | 150 | 180 | 180 | 180 | 2x150 | 2x180 |
| Body | 304 Cr - Ni Body | | | | | | | | | |
| Control | COOLMAR PRO. CM- MPC20 | | | | | | | | | |
| Water Pipe Dimension (mm) | 12 | 15 | 15 | 15 | 15 | 19 | 19 | 19 | 19 | 19 |
| Drainage Pipe Diameter (mm) | 19 | | | | | | | | | |
| Dimensions | | | | | | | | | | |
| Height (mm) | 280 | 330 | 330 | 330 | 360 | 360 | 360 | 360 | 400 | 400 |
| Lenght (mm) w/o valve | 310 | 320 | 370 | 400 | 440 | 480 | 480 | 580 | 610 | 660 |
| Lenght (mm) valve | 360 | 370 | 420 | 450 | 490 | 550 | 550 | 630 | 670 | 720 |
| Width (mm) | 275 | 275 | 275 | 275 | 375 | 395 | 395 | 395 | 450 | 450 |
| Weight (kg) | 6.5 | 9 | 10 | 13 | 14 | 15 | 20 | 21 | 23 | 27 |

COOLING Internal conditions : 19.5°C / 27°C (YT/KT) EXTERNAL CONDITIONS (Water °C) : 28°C

HEATING Internal conditions : 16°C / 22°C (YT/KT) EXTERNAL CONDITIONS (Water °C) : 8°C

Technical Specifications and sizes to change without notice.

# MAF - SL SERIES

MAF 30 SL

MAF 12 SL

## FANCOIL SLIMLINE

## TECHNICAL SPECIFICATIONS

| MODEL | MAF - SL | | | | | | | |
|---|---|---|---|---|---|---|---|---|
| CAPACITY | 004 | 008 | 010 | 012 | 016 | 020 | 24 | 30 |
| Capacity (Btu/h) | 4,000 | 7,500 | 9,700 | 12,500 | 16,000 | 20,000 | 24,000 | 30,000 |
| Capacity (Kcal/h) | 1,010 | 1,894 | 2,449 | 3,157 | 4,040 | 5,051 | 6,061 | 7,576 |
| Power Supply | 220-240V / 1Ph / 50Hz | | | | | | | |
| Power Consumption (Watt) | 80 | 115 | 115 | 180 | 180 | 250 | 300 | 360 |
| Operating Current (A) | 0.3 | 0.4 | 0.5 | 0.7 | 0.8 | 0.9 | 1.1 | 1,6 |
| Air Flow (m3/h) | 200 | 275 | 320 | 520 | 650 | 950 | 1000 | 1300 |
| Duct Diameter (mm) | 100 | 100 | 100 | 125 | 125 | 2X125 | 2X125 | 2X125 |
| Body | 304 Cr - Ni Body | | | | | | | |
| Control | COOLMAR PRO. CM- MPC20 | | | | | | | |
| Water Line Hose (mm) | 12 | 15 | 15 | 15 | 15 | 19 | 19 | 19 |
| Drainage Pipe Diameter (mm) | 15 | | | | | | | |
| Dimensions | | | | | | | | |
| Height (mm) | 525 | 550 | 550 | 550 | 600 | 620 | 900 | 900 |
| Lenght (mm) | 360 | 420 | 420 | 420 | 520 | 520 | 520 | 520 |
| Width (mm) | 170 | 170 | 170 | 170 | 185 | 185 | 185 | 185 |
| Weight (kg) | 7 | 9.5 | 10 | 12 | 14 | 19 | 30 | 30 |

COOLING Internal conditions : 19.5°C / 27°C (YT/KT) EXTERNAL CONDITIONS (Water °C) : 28°C

HEATING Internal conditions : 16°C / 22°C (YT/KT) EXTERNAL CONDITIONS (Water °C) : 8°C

Technical Specifications and sizes to change without notice.

# MAF - CF SERIES

MAF 10 CF

MAF 16 CF

## FANCOIL CROSFLOW

## TECHNICAL SPECIFICATIONS

| MODEL | MAF - C | | | | | |
|---|---|---|---|---|---|---|
| CAPACITY | 004 | 006 | 008 | 010 | 012 | 016 |
| Capacity (Btu/h) | 4,000 | 6,000 | 7,500 | 9,700 | 12,500 | 16,000 |
| Capacity (Kcal/h) | 1,010 | 1,515 | 1,894 | 2,449 | 3,157 | 4,040 |
| Power Supply | 220-240V / 1Ph / 50Hz | | | | | |
| Power Consumption (Watt) | 29 | 33 | 45 | 45 | 45 | 65 |
| Operating Current (A) | 0.13 | 0.15 | 0.2 | 0.2 | 0.2 | 0.3 |
| Air Flow (m3/h) | 150 | 170 | 230 | 230 | 230 | 420 |
| Duct Diameter (mm) | 60x180 | 60X240 | 60x300 | 60x300 | 60x300 | 60x300 x2 |
| Body | 304 Cr - Ni Body | | | | | |
| Control | COOLMAR PRO. CM - MPC20 LCD | | | | | |
| Water Pipe Dimension (mm) | 12 | 12 | 15 | 15 | 15 | 15 |
| Drainage Pipe Diameter (mm) | 15 | | | | | |
| Dimensions | | | | | | |
| Height (mm) | 150 | 150 | 170 | 170 | 170 | 170 |
| Lenght (mm) | 330 | 330 | 330 | 330 | 330 | 330 |
| Width (mm) | 300 | 350 | 420 | 420 | 460 | 760 |
| Weight (kg) | 6.5 | 7 | 8 | 9 | 11 | 16 |

COOLING Internal conditions : 19.5°C / 27°C (YT/KT) EXTERNAL CONDITIONS (Water °C) : 28°C
HEATING Internal conditions : 16°C / 22°C (YT/KT) EXTERNAL CONDITIONS (Water °C) : 8°C

Technical Specifications and sizes to change without notice.

# MAS SERIES

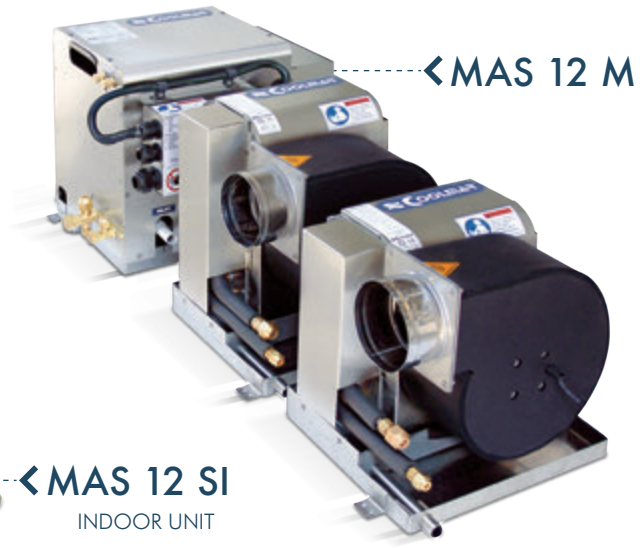


ocean's wonder...

## TECHNICAL SPECIFICATIONS

| SYSTEM | | | HEAT PUMP | | | | | | | | |
|---|---|---|---|---|---|---|---|---|---|---|---|
| MODEL | | | MAS | | | | | | | | |
| CAPACITY | | | 005 | 008 | 010 | 012 | 016 | 018 | 020 | 022 | 024 |
| Power Supply | | Indoor | 220-240V / 1Ph / 50Hz | | | | | | | | |
| | | Outdoor | 220-240V / 1Ph / 50Hz | | | | | | | | |
| Cooling Capacity | | Btu/h | 4,600 | 7,500 | 9,500 | 12,200 | 15,000 | 18,200 | 20,000 | 22,100 | 24,600 |
| Heating Capacity | | Btu/h | 4,900 | 7,600 | 9,700 | 12,600 | 15,800 | 18,700 | 20,300 | 22,600 | 25,000 |
| Power Consumption | | W | 550 | 690 | 736 | 943 | 1196 | 1357 | 1426 | 1495 | 1725 |
| Operating Current (Cool / Heat) | | Indoor (A) | 0.2 | 0.3 | 0.4 | 0.5 | 0.5 | 0.6 | 0.6 | 0.7 | 0.7 |
| | | Outdoor (A) | 2.5/3.0 | 3.0/3.9 | 3.1/4.2 | 4.1/5.4 | 5.2/6.8 | 5.9/7.7 | 6.2/8.1 | 6.5/8.4 | 7.5/9.3 |
| Duct Diameter | | mm | 100 | 125 | 125 | 125 | 150 | 180 | 180 | 180 | 180 |
| Refrigerant / Control | | | R-134A / R 410 A / R-22 / R-407C HFC - Capillary Tube | | | | | | | | |
| INDOOR UNIT | DIMENSION (mm) | Height | 270 | 320 | 320 | 320 | 350 | 370 | 400 | 400 | 400 |
| | | Lenght | 320 | 345 | 345 | 390 | 420 | 420 | 445 | 445 | 445 |
| | | Width | 270 | 270 | 270 | 270 | 320 | 320 | 320 | 320 | 320 |
| | Weight | Kg | 6 | 8 | 8.5 | 12 | 16 | 18 | 19 | 20 | 21 |
| | Air Flow | $m^3/h$ | 250 | 330 | 380 | 480 | 620 | 750 | 850 | 950 | 1,050 |
| | Fan Motor | W | 80 | 110 | 115 | 180 | 180 | 180 | 300 | 300 | 330 |
| OUTDOOR UNIT | DIMENSION (mm) | Height | 280 | 320 | 320 | 340 | 370 | 370 | 420 | 420 | 420 |
| | | Lenght | 285 | 285 | 285 | 285 | 320 | 320 | 320 | 320 | 320 |
| | | Width | 260 | 275 | 275 | 275 | 320 | 320 | 320 | 320 | 320 |
| PIPE DIMENSION | Weight | Kg | 15 | 17 | 18 | 19 | 25 | 27 | 28 | 30 | 32 |
| | Suction Line | inch (mm) | 3/8"(10) | 3/8"(10) | 3/8"(10) | 3/8"(10) | 1/2"(12) | 1/2"(12) | 1/2"(12) | 1/2"(12) | 1/2"(12) |
| | Liquid Line | inch (mm) | 1/.4"(6) | 1/.4"(6) | 1/.4"(6) | 1/.4"(6) | 1/.4"(6) | 1/.4"(6) | 3/8"(10) | 3/8"(10) | 3/8"(10) |
| | Condenser | inch (mm) | 5/8"(15) | 3/4"(19) | 3/4"(19) | 3/4"(19) | 3/4"(19) | 3/4"(19) | 3/4"(19) | 3/4"(19) | 3/4"(19) |
| | Drain | inch (mm) | 5/8"(15) | 5/8"(15) | 5/8"(15) | 5/8"(15) | 5/8"(15) | 5/8"(15) | 5/8"(15) | 5/8"(15) | 5/8"(15) |
| Condanser Water Flow | | Lt/min | 8 | 10 | 11 | 13 | 15 | 18 | 20 | 20 | 22 |

COOLING Internal conditions : 19.5°C / 27°C (YT/KT) EXTERNAL CONDITIONS (Water °C) : 28°C

HEATING Internal conditions : 16°C / 22°C (YT/KT) EXTERNAL CONDITIONS (Water °C) : 8°C

Technical Specifications and sizes to change without notice.

# MAC SERIES

Our chiller systems are within two different groups by modular and single body models. Our modular chiller units have various advantages such as easiness for installation, maintenance and repair and occupying a small place in the boats. Minimum loss of power, maximum performance and rapid cooling-heating can be ensured thanks to stainless plate heat exchanger in its hardware. It displays a great resistance to marine conditions for years by its chromium-nickel body and connectors (quality 304) and copper-nickel alloyed condenser. In addition to three water sensors, the system was fully protected by high-low gas pressure protection, water flow check and freezing sensor. It provides operation under most appropriate conditions by its control system (manufactured by Carel-Danfoss), wide programming range and temperature sensors. In addition to our standard manufactures, specially tailored chiller units aiming to avoid installation place problems are projected and provided for our customers.

## CHILLER UNIT - SINGLE COMPRESSOR

| MODEL NO | CAPACITY | Power Supply | Operating Current* | LRA ** | Power Consumption | Sea Water Flow | Chiller Water Flow |
|---|---|---|---|---|---|---|---|
| | ( Btu/h ) | | ( A ) | ( A ) | ( KW ) | ( Lt/min ) | ( Lt/min ) |
| MAC 024 S1 | 24.000 | 230V/1Ph/50Hz | 7,5 | 56 | 1,7 | 26 | 25 |
| MAC 030 S1 | 30.000 | 230V/1Ph/50Hz | 7,8 | 66 | 1,8 | 32 | 28 |
| MAC 030 S3 | 31.000 | 400V/3Ph/50Hz | 3,3 | 39 | 1,75 | 32 | 28 |
| MAC 036 S1 | 36.000 | 230V/1Ph/50Hz | 9,8 | 83 | 2,2 | 36 | 32 |
| MAC 036 S3 | 36.000 | 400V/3Ph/50Hz | 4,46 | 45 | 2 | 36 | 32 |
| MAC 044 S3 | 44.000 | 400V/3Ph/50Hz | 4,6 | 41 | 2,4 | 42 | 38 |
| MAC 050 S3 | 50.000 | 400V/3Ph/50Hz | 5 | 53 | 2,7 | 45 | 42 |
| MAC 060 S3 | 60.000 | 400V/3Ph/50Hz | 6,8 | 82 | 3,4 | 60 | 58 |
| MAC 072 S3 | 72.100 | 400V/3Ph/50Hz | 8,55 | 87 | 3,9 | 70 | 65 |
| MAC 083 S3 | 83.300 | 400V/3Ph/50Hz | 9,9 | 100 | 4,6 | 80 | 68 |
| MAC 090 S3 | 92.000 | 400V/3Ph/50Hz | 10,5 | 98 | 5,2 | 88 | 75 |
| MAC 100 S3 | 107.000 | 400V/3Ph/50Hz | 13,2 | 142 | 6,3 | 104 | 98 |
| MAC 120 S3 | 121.000 | 400V/3Ph/50Hz | 13,8 | 142 | 6,8 | 122 | 116 |
| MAC 140 S3 | 140.000 | 400V/3Ph/50Hz | 15,55 | 147 | 7,8 | 130 | 120 |

## CHILLER UNIT - DUAL COMPRESSOR

| MODEL NO | CAPACITY | Power Supply | Operating Current* | LRA ** | Power Consumption | Sea Water Flow | Chiller Water Flow |
|---|---|---|---|---|---|---|---|
| | ( Btu/h ) | | ( A ) | ( A ) | ( KW ) | ( Lt/min ) | ( Lt/min ) |
| MAC 048 D1 | 48.000 | 230V/1Ph/50Hz | 15 | 56 | 3,4 | 52 | 50 |
| MAC 060 D1 | 60.000 | 230V/1Ph/50Hz | 15,6 | 66 | 3,6 | 64 | 56 |
| MAC 060 D3 | 62.000 | 400V/3Ph/50Hz | 6,6 | 39 | 3,5 | 64 | 56 |
| MAC 072 D1 | 72.000 | 230V/1Ph/50Hz | 19,6 | 83 | 4,4 | 72 | 64 |
| MAC 072 D3 | 72.000 | 400V/3Ph/50Hz | 8,92 | 45 | 4 | 72 | 64 |
| MAC 088 D3 | 88.000 | 400V/3Ph/50Hz | 9,2 | 41 | 4,8 | 84 | 76 |
| MAC 100 D3 | 100.000 | 400V/3Ph/50Hz | 10 | 53 | 5,4 | 90 | 84 |
| MAC 120 D3 | 120.000 | 400V/3Ph/50Hz | 13,6 | 82 | 6,8 | 120 | 116 |
| MAC 144 D3 | 144.200 | 400V/3Ph/50Hz | 17,1 | 87 | 7,8 | 140 | 130 |
| MAC 166 D3 | 166.600 | 400V/3Ph/50Hz | 19,8 | 100 | 9,2 | 160 | 136 |
| MAC 180 D3 | 184.000 | 400V/3Ph/50Hz | 21 | 98 | 10,4 | 176 | 150 |
| MAC 200 D3 | 214.000 | 400V/3Ph/50Hz | 26,4 | 142 | 12,6 | 208 | 196 |
| MAC 240 D3 | 242.000 | 400V/3Ph/50Hz | 27,6 | 142 | 13,6 | 244 | 232 |
| MAC 280 D3 | 280.000 | 400V/3Ph/50Hz | 31,1 | 147 | 15,6 | 260 | 240 |

- Capacities are designed at 7 °C evaporation and 38 °C condensation temperature conditions.
- Operating Current (A) *: The amps are given at 7 °C evaporation and 38 °C condensation temperature conditions of compressor manufacturer selection programs.
- LRA (A) **: Amperage value of 1(one) compressor.
- All models have heat pump heating system.
- Technical Specifications and sizes to change without notice.

# MAC SERIES

## CHILLER UNIT - TREE COMPRESSOR

| MODEL NO | CAPACITY | Power Supply | Operating Current* | LRA ** | Power Consumption | Sea Water Flow | Chiller Water Flow |
|---|---|---|---|---|---|---|---|
| | ( Btu/h ) | | ( A ) | ( A ) | ( KW ) | ( Lt/min ) | ( Lt/min ) |
| MAC 072 T1 | 72.000 | 230V/1Ph/50Hz | 22,5 | 56 | 5,1 | 78 | 75 |
| MAC 090 T1 | 90.000 | 230V/1Ph/50Hz | 23,4 | 66 | 5,4 | 96 | 84 |
| MAC 090 T3 | 93.000 | 400V/3Ph/50Hz | 9,9 | 39 | 5,25 | 96 | 84 |
| MAC 108 T1 | 108.000 | 230V/1Ph/50Hz | 29,4 | 83 | 6,6 | 108 | 96 |
| MAC 108 T3 | 108.000 | 400V/3Ph/50Hz | 13,38 | 45 | 6 | 108 | 96 |
| MAC 132 T3 | 132.000 | 400V/3Ph/50Hz | 13,8 | 41 | 7,2 | 126 | 114 |
| MAC 150 T3 | 150.000 | 400V/3Ph/50Hz | 15 | 53 | 8,1 | 135 | 126 |
| MAC 180 T3 | 180.000 | 400V/3Ph/50Hz | 20,4 | 82 | 10,2 | 180 | 174 |
| MAC 216 T3 | 216.300 | 400V/3Ph/50Hz | 25,65 | 87 | 11,7 | 210 | 195 |
| MAC 250 T3 | 250.000 | 400V/3Ph/50Hz | 29,7 | 100 | 13,8 | 240 | 204 |
| MAC 270 T3 | 276.000 | 400V/3Ph/50Hz | 31,5 | 98 | 15,6 | 264 | 225 |
| MAC 300 T3 | 321.000 | 400V/3Ph/50Hz | 39,6 | 142 | 18,9 | 312 | 294 |
| MAC 360 T3 | 363.000 | 400V/3Ph/50Hz | 41,4 | 142 | 20,4 | 366 | 348 |
| MAC 320 T3 | 420.000 | 400V/3Ph/50Hz | 46,65 | 147 | 23,4 | 390 | 360 |

## CHILLER UNIT - FOUR COMPRESSOR

| MODEL NO | CAPACITY | Power Supply | Operating Current* | LRA ** | Power Consumption | Sea Water Flow | Chiller Water Flow |
|---|---|---|---|---|---|---|---|
| | ( Btu/h ) | | ( A ) | ( A ) | ( KW ) | ( Lt/min ) | ( Lt/min ) |
| MAC 096 F1 | 96.000 | 230V/1Ph/50Hz | 30 | 56 | 6,8 | 104 | 100 |
| MAC 120 F1 | 120.000 | 230V/1Ph/50Hz | 31,2 | 66 | 7,2 | 128 | 112 |
| MAC 120 F3 | 124.000 | 400V/3Ph/50Hz | 13,2 | 39 | 7 | 128 | 112 |
| MAC 144 F1 | 144.000 | 230V/1Ph/50Hz | 39,2 | 83 | 8,8 | 144 | 128 |
| MAC 144 F3 | 144.000 | 400V/3Ph/50Hz | 17,84 | 45 | 8 | 144 | 128 |
| MAC 180 F3 | 176.000 | 400V/3Ph/50Hz | 18,4 | 41 | 9,6 | 168 | 152 |
| MAC 200 F3 | 200.000 | 400V/3Ph/50Hz | 20 | 53 | 10,8 | 180 | 168 |
| MAC 240 F3 | 240.000 | 400V/3Ph/50Hz | 27,2 | 82 | 13,6 | 240 | 232 |
| MAC 288 F3 | 288.400 | 400V/3Ph/50Hz | 34,2 | 87 | 15,6 | 280 | 260 |
| MAC 330 F3 | 333.200 | 400V/3Ph/50Hz | 39,6 | 100 | 18,4 | 320 | 290 |
| MAC 360 F3 | 268.000 | 400V/3Ph/50Hz | 42 | 98 | 20,8 | 352 | 330 |
| MAC 400 F3 | 428.000 | 400V/3Ph/50Hz | 52,8 | 142 | 25,2 | 416 | 392 |
| MAC 480 F3 | 484.000 | 400V/3Ph/50Hz | 55,2 | 142 | 27,2 | 488 | 464 |
| MAC 560 F3 | 560.000 | 400V/3Ph/50Hz | 62,2 | 147 | 31,2 | 520 | 480 |
| MAC 630 F3 | 630.000 | 400V/3Ph/50Hz | 64,8 | 158 | 34,5 | 585 | 540 |
| MAC 720 F3 | 720.000 | 400V/3Ph/50Hz | 74,8 | 170 | 39,3 | 670 | 620 |

- Capacities are designed at 7 °C evaporation and 38 °C condensation temperature conditions.
- Operating Current (A) *: The amps are given at 7 °C evaporation and 38 °C condensation temperature conditions of compressor manufacturer selection programs.
- LRA (A) **: Amperage value of 1(one) compressor.
- All models have heat pump heating system.

Technical Specifications and sizes to change without notice.

# INVERTER CHILLER

Inverter compressor

Inverter speed drive

Chiller control

Temperature probe

Electronic pressure control

Sea water flow control

Electronic pressure transmitter

Electronic expantion valve

Superheat control board

| MODEL NO (S3) | MAC072-I | MAC100-I | MAC130-I | MAC160-I | MAC190-I |
|---|---|---|---|---|---|
| Capacity Rance Min. Btu/h | 13.555 | 17.121 | 23.487 | 28.475 | 33.600 |
| Capacity Rance Max. Btu/h | 88.722 | 112.648 | 137.439 | 165.570 | 192.000 |
| Power Supply | DC INVERTER 400V / 3Ph / | | | | |
| Operating Current Max. (A) | 10,9 | 13,2 | 16,2 | 19,8 | 21,3 |
| Power Consumption max. (KW) | 5,2 | 6,6 | 8,1 | 10,5 | 11,7 |
| Refrigerant | R410A | | | | |
| Refrigerant Control | TXV -E | | | | |
| Sea Water Condenser | 90/10 Cu-Ni | | | | |
| Compressor Type | SCROLL | SCROLL | SCROLL | SCROLL | SCROLL |
| Chiller Type | 316 crni Plate Heat Exchanger | | | | |
| Body | 304 Cr-Ni | | | | |
| Control | Carel / Danfoss | | | | |
| Condenser Pipe Dia (inch) | 1 " | 1 1/4 " | 1 1/4 " | 1 1/2" | 1 1/2" |
| Chiller Pipe Dia (inch) | 1" | 1 1/4" | 1 1/2" | 2" | 2" |
| Drain Pipe Dia (mm) | 19 | | | | |
| Sea Water Flow lt/min | 85 | 115 | 132 | 170 | 200 |
| Chiller Water Flow lt/min | 82 | 110 | 125 | 160 | 185 |

COOLING Internal conditions : 19.5°C / 27°C (YT/KT) EXTERNAL CONDITIONS (Water °C) : 28°C
HEATING Internal conditions : 16°C / 22°C (YT/KT) EXTERNAL CONDITIONS (Water °C) : 8°C

Technical Specifications and sizes to change without notice.

## MAC INVERTER

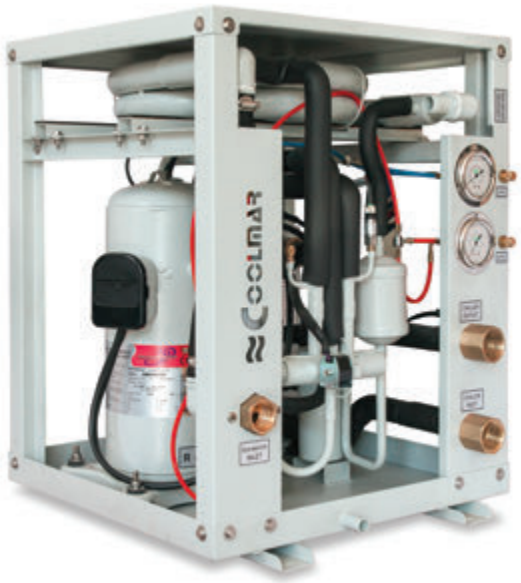

Impressively low operating cost is a key advantage of inverter air conditioners. We've combined advanced inverter technologies with cutting-edge electronics and mechaniel technologies to achieve a synergistic effect that enables improvements in heating/cooling performance efficiency. Better performance and lower energy consumption are the results. Our models, which have been developed by adding inverter technology to the Coolmar chiller units, operate with less electricity consumption and with maximum efficiency compared to the normal systems. Our Inverter chiller products provide 14.000-192.000 Btu/h capacity at three phases system between 12.000 – 72.000 Btu/h mono phase system. DC Inverter systems do not require high power at first take-off compared to the normal systems, therefore they decrease the electricity load fluctuations up to the minimum levels by not imposing any burden to the generator. By controlling water temperature in the circuit, it operates stable at requested water temperature at lower speeds. At first operation, it enables maximum power and fast cooling. When the circuit water temperature reaches at desired temperature, inverter continues to operate at lower energy by decreasing its speed. It enables full load operation at maximum efficiency by performing pressure and temperature checks sensitively with electronic expansion valve and superheat control board. The system measures itself all the time with programmable developed electronic control systems and operates more efficiently with less energy consumption and real capacity.

# MAR SERIES

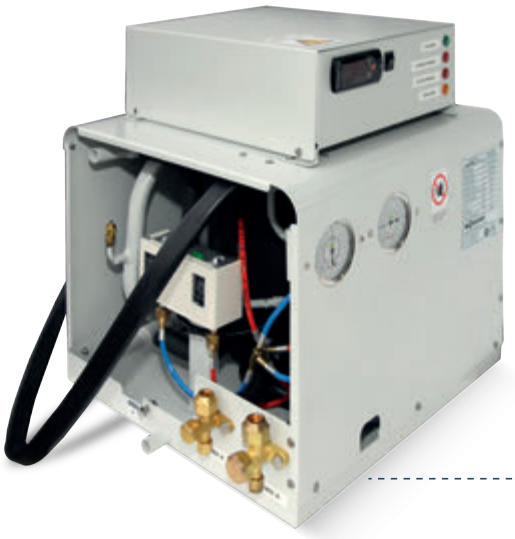

MAR 072

## COOLERS

### TECHNICAL SPECIFICATIONS

| MODEL NO | MAR-012 | MAR-015 | MAR-018 | MAR-024 | MAR-036 | MAR-054 | MAR-072 |
|---|---|---|---|---|---|---|---|
| Capacity (Kcal/h) | 280 | 300 | 350 | 420 | 480 | 550 | 750 |
| Power Supply | 230V / 1Ph / 50Hz | | | | | | |
| Power Consumption (W) | 240 | 250 | 260 | 270 | 300 | 350 | 380 |
| Operating Current FLA (A) | 1.1 | 1.13 | 1.18 | 1.22 | 1.36 | 1.60 | 1.72 |
| Height (mm) | 290 | 290 | 290 | 300 | 300 | 300 | 300 |
| Lenght (mm) | 350 | 350 | 350 | 370 | 370 | 400 | 400 |
| Width (mm) | 370 | 370 | 370 | 385 | 385 | 400 | 400 |
| Weight (kg) | 23 | 24 | 24 | 25 | 26 | 27 | 28 |

| MODEL NO | MAR 1218-I | MAR 2436-I | MAR 5472-I |
|---|---|---|---|
| Power Supply | 230V / 1Ph / 50Hz | | |
| Power Consumption (W) | 29 | 33 | 45 |
| Air Flow (m3/h) | 170 | 170 | 230 |
| Fan Motor Type | Cross Flow | | |
| Height (mm) | 375 | 500 | 785 |
| Lenght (mm) | 410 | 410 | 410 |
| Width (mm) | 150 | 150 | 150 |
| Weight (kg) | 9 | 11 | 18 |

COOLING EXTERNAL CONDITIONS (Water °C) : 28°C
HEATING EXTERNAL CONDITIONS (Water °C) : 8°C

Technical Specifications and sizes to change without notice.

# PDU SERIES

PDU 80

PDU 150

Coolmar Marine type packaged air conditioners with central system are manufactured as per requests; therefore, the rival companies are outdistanced thanks to chromium body, changeable air volumes and pressures as well as body and technical specifications that may be modified in line with the ordered projects. The systems will be in between 10 kW and 150 kW upon requests of the customers.

Depending on the structure, voltage requirements, climate and region; humidifying and fresh air units can be added to the devices in addition to heating processes conducted by using tank water via heat pumps, resistors, or additional batteries.

## PDU (DX CENTRAL AIR CONDITIONING)

### TECHNICAL SPECIFICATIONS

| SYSTEM | | | | COOLING - HEAT PUMP - HEATER | | | | | | | | |
|---|---|---|---|---|---|---|---|---|---|---|---|---|
| MODEL | | | | PDU | | | | | | | | |
| CAPACITY | | | 40 | 50 | 60 | 80 | 100 | 120 | 150 | 180 | 200 |
| Power Supply | | | 380 - 460V / 3Ph / 50-60Hz | | | | | | | | |
| Cooling Capacity | | Btu/h | 41,200 | 48,000 | 58,600 | 82,000 | 102,000 | 123,000 | 145,000 | 178,000 | 210,000 |
| Heating Capacity | | Btu/h | 46,000 | 52,000 | 63,000 | 90,000 | 108,000 | 135,000 | OPS. | OPS. | OPS. |
| Power Consumption | | W | 4,400 | 4,900 | 6,500 | 8,300 | 9,400 | 11,600 | 12,700 | 14,400 | 15,500 |
| Operating Current | | A | 7.7 | 9.6 | 12 | 15 | 17.5 | 21 | 23 | 26 | 28 |
| Refrigerant - Control | | | R-134A / R-22 / R-407C / R-410A HFC - Capillary Tube / TXV | | | | | | | | |
| Air Flow | | m3/h | 2,500 | 3,250 | 4,500 | 6,500 | 7,000 | 9,500 | 11,500 | 13,500 | 15,000 |
| Fan Motor | | W | 2,200 | 3,000 | 4,000 | 5,500 | 5,500 | 5,500 | 8,000 | 8,000 | 8,000 |
| Pipe Dimension | Condenser | inch (mm) | 1"(25) | 1"(25) | 1"(25) | 11/4"(32) | 11/4"(32) | 11/4"(32) | 11/2"(38) | 11/2"(38) | 11/2"(38) |
| | Drainage | inch (mm) | 1" (25) | | | | | | | | |
| Condenser Water Flow | | Lt/min | 41 | 48 | 63 | 82 | 96 | 125 | 148 | 180 | 210 |

COOLING Internal conditions : 19.5°C / 27°C (YT/KT) EXTERNAL CONDITIONS (Water °C) : 28°C

HEATING Internal conditions : 16°C / 22°C (YT/KT) EXTERNAL CONDITIONS (Water °C) : 8°C

Technical Specifications and sizes to change without notice.

# FDU SERIES

FDU 120

FDU 80

Coolmar Marine type central system air conditioning units are manufactured as per requests within the air volume range of 750-25,000 m3/h so as to be functional; therefore, the expectations are surpassed and rival companies are outdistanced thanks to double layer chromium body as well as the body and technical specifications that may be modified in line with the ordered projects. They are manufactured in between 10 kW and 150 kW upon requests of the customers by making calculations along with structures established thanks to the project team of Coolmar.

All capacity calculations, air volume requirement, channel calculations and all assistant elements are provided for the customer by Coolmar. These are such units which can be controlled for 24 hours with heating, cooling and humidifying functions and provide full automation upon request depending on the changeable structures and voltage requirements as well as the climate and region in which it shall operate. Coolmar will be your solution partner providing all of your needs during the construction process for which the shipyard need help most thanks to wide capacity range of the units.

## FDU MARINE TYPE AHU

ocean's wonder...

## TECHNICAL SPECIFICATIONS

| SYSTEM | | | | COOLING - HEAT PUMP - HEATER | | | | | | | |
|---|---|---|---|---|---|---|---|---|---|---|---|
| MODEL | | | | FDU | | | | | | | |
| CAPACITY | | | 040 | 050 | 060 | 080 | 100 | 120 | 150 | 180 | 200 |
| Power Supply | | | 380-460V / 3Ph / 50-60Hz | | | | | | | | |
| Cooling Capacity | | Btu/h | 41,200 | 48,000 | 58,600 | 82,000 | 98,000 | 123,000 | 145,000 | 178,000 | 210,000 |
| Heating Capacity | | Btu/h | 46,000 | 52,000 | 63,000 | 90,000 | 105,000 | 130,000 | 150,000 | 185,000 | 280,000 |
| Power Consumption | | W | 1,380 | 1,660 | 2,500 | 3,400 | 3,500 | 3,800 | 3,900 | 4,500 | 4,700 |
| Operating Current | | A | 2.2 | 3 | 4 | 5.5 | 5.5 | 6.5 | 7 | 8 | 8,5 |
| Refrigerant - Control | | | WATER | | | | | | | | |
| Air Flow | | $m^3/h$ | 2,500 | 3,250 | 4,000 | 5,000 | 6,000 | 7,500 | 9,900 | 11,000 | 12,500 |
| Pipe Dimension | Chiller Water | inch (mm) | 1"(25) | 1"(25) | 11/4"(32) | 11/4"(32) | 11/4"(32) | 11/2"(38) | 11/2"(38) | 2"(50) | 11/2"(38) |
| | Drainage | inch (mm) | 1" | | | | | | | | |
| Chiller Water Flow | | Lt/min | 45 | 52 | 58 | 70 | 98 | 116 | 135 | 178 | 210 |

COOLING Internal conditions : 19.5°C / 27°C (YT/KT) EXTERNAL CONDITIONS (Water °C) : 28°C

HEATING Internal conditions : 16°C / 22°C (YT/KT) EXTERNAL CONDITIONS (Water °C) : 8°C

Technical Specifications and sizes to change without notice.

# CONTROL SYSTEMS

CM-MPC-30 LCD

CM-MPC-20 LCD

CM-MPC-11

CAREL CHILLER CONTROL

DANFOSS CHILLER CONTROL

CM-MPC-12

SYSTEM & INSTALLATION

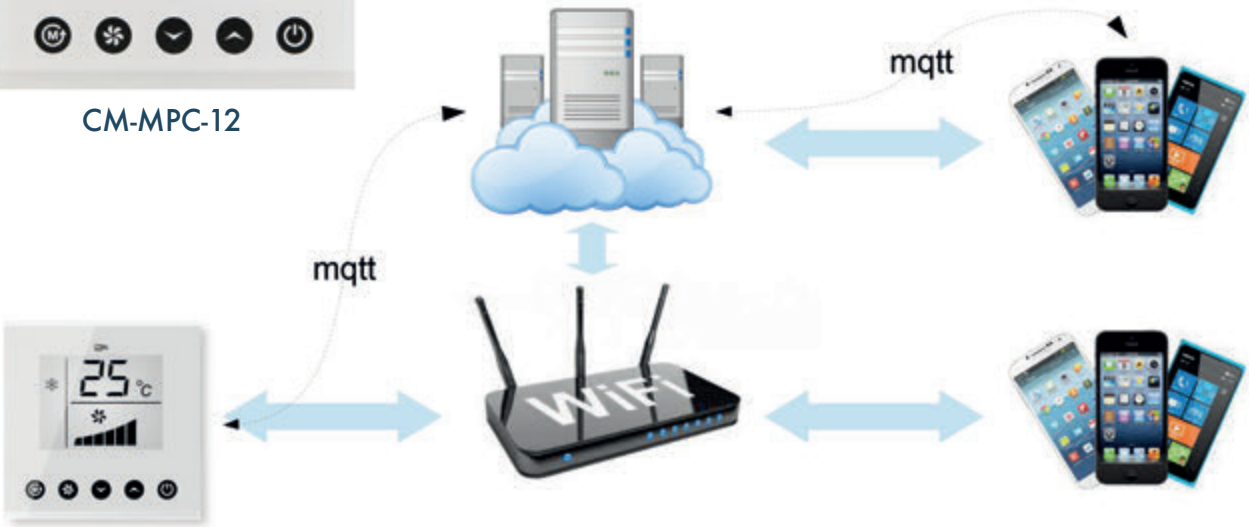

### Ankastre Kontrol

Geniş renk seçeneği, biçimi ve çizgileriyle zamana meydan okuyan Vimar, çerçevelerin kullanıldığı ankaste kontroller kolay kullanımı, programlanabilir özelliği ile mekanlara şıklık ve fonksiyonelliği bir arada sunmaktadır.

### Fan Gövdesi

Hava kanallarının döşenmesinde montaj esnekliği sağlamak amacıyla dizayn edilmiş 0 - 90 derece arasında dönebilen fan gövdesi.

### Krom Kabinet

Yuvarlak hatlı dizaynı ile oluşturulan krom kabinet kompresör sesini kendi gövdesi içersinde hapseder ayrıca dış darbelere karşı mekanik ve elektrik donanımını korur.

### Kondenser

İç boru 90/10 Bakır - Nikel alaşımlı, dış boru bakır olarak dizayn edilen Coolmar marin kondenserlerimiz uzun yıllar deniz suyuna dayanıklılık özelliği ile dünya standartlarındadır.

### Evaparatör

Üretimimizde kullanılan evaparatörlerimiz, asitli ortamlar ve deniz şartlarına uzun yıllar dayanıklı mavi renkli hidrofilik epoxy alaşım ile kaplıdır ve üzerinde su tutmaz.

### Build-in Control

The control panel covered with Vimar, Idea, Rondò frames having alternative ranges of color, style and desing features and endurance against time, provide for both elegance and functionality in your residences.

### Blower Housing

The housing blower designed to rotate between 0 - 90 degrees ensure flexibility on assembling and locating the ducted units.

### Chromium Cabinet

Elegantly designed curved chromium cabinet blocks the sound of the compressor and secures protection of the mechanical and electrical parts therein from outside strokes and damages.

### Condenser

Our Coolmar marine condensers; as a reputable brand meeting word standards; are desingned with 90 / 10 copper / nickel alloy inside the pipes and 100% copper on the outside;provide long endurance and resistance to sea water for many years.

### Evaporator

Our evaporators are coated with blue hydrophilic epoxy paint which provides high resistance to sea water and acidic conditions. Hydrophilic paint supports the water drops to drain easily and prevents air dust to stick on the evaporator.

---

### Beş Farklı Çalışma Modu

Klimamızın soğutma, ısıtma, otomatik, fan, nem alma fonksiyonlarında çalışabilecek beş farklı çalışma modu bulunmaktadır.

### Otomasyon

Klimalarımız otomasyon sistemlerinde kullanılan en son nokta can bus otomasyon yazılımı ile tek merkezden sistemdeki tüm klimaların kontrolü yapılabilmektedir.

### RS 485

RS 485 veri yolu iletişimi ile display ve anakart arası hatasız ve hızlı veri transferi sağlanabilmektedir.

### Gaz Basınç Kontrolü

Sistemin çalışmasını olumsuz yönde etkileyecek kritik gaz basınç değerlerini, direk anakart üzerinde takılı basın kontrol ekipmanları ile kontrol edilmektedir.

### Deniz Suyu Pompası Kontrolü

Deniz suyu pompası klimanın çalışmasından altı saniye önce devreye girer. Klimanın durmasından altı saniye sonra devreden çıkar. Bu kontrol anakart üzerinden programlama ile sağlanmaktadır.

### Gece Modu

Yatak odaları için düşünülmüş gece modu, bedenimizin uyku halindeyken soğuk yada sıcak hava sıcaklıklarından rahatsızlık duymaması için, oda sıcaklığını programa göre otomatik değiştirerek, gece boyunca konforlu bir ortam yaratmaktadır.

### Gözlem

Ekranda klimamızın donanımındaki tüm elektrikli parçalara ve deniz suyu pompasına ait sekiz adet özel simge yer almaktadır. Bu simgeler o an hangi elektrikli parçanın devrede olduğunu göstermektedir.

### Elektrik Kesintisi Sonrası Otamatik Çalışma Fonksiyonu

Enerji kesilmesinde, önceden seçilmiş program, enerji tekrar geldiğinde hiçbir değişikliğe uğramadan ve yeni programlama gerektirmeden otomatik olarak çalışmaya başlar.

### Otomatik Fan Hız Ayar

Oda sıcaklığına göre ve oda içinde rahat bir hava akımı sağlamak amacıyla mikro işlemci uygulamalı ve 3 aşamalı fan hızı ayarı. (Isıtma fonksiyonunda 4. aşama olarak başlangıç hava hızı devri)

### Otomatik Sıcaklık Kontrolü

Oda sıcaklığını ölçerek arzu edilen sıcaklık derecesi elde edilene kadar klimamız çalışmayı sürdürür. Hava şartları ne olursa olsun, iç ortamdaki sıcaklığı sabit düzeyde tutarak konforlu bir ortam sağlar.

### Otomatik Arıza Bildirme

Dijital Termostat üzerindeki ekranda arıza kodları yanıp sönerek hangi bölümünde olduğunu otomatik olarak gösterir ve onarımda büyük kolaylık sağlar.

### 12 Saat on/off Programlama

12 saatlik zaman birimi içinde bu ayar modunu kullanarak klimanızı istediğiniz an açıp istediğiniz an kapatabilecek şekilde programlayabilirsiniz.

### 3 Dakika Otomatik Emniyet Fonksiyonu

Ani elektrik kesilmelerinde 3 dakika otomatik emniyet fonksiyonu devreye girerek kompresör ve diğer donanımların zarar görmesini engeller.

### Soğutma / Isıtma

Sağlık koşullarına uygun ideal soğutma sağlayarak, ısı pompası özelliği ile de 5°C üzerindeki deniz suyu sıcaklığında çok ekonomik ısıtma sağlar.

### Krom

Klimamızın üretiminde bağlantı elemanları (vida, somun, pul v.b.) dahil, tamamında 304 Kalite krom-nikel malzeme kullanılmıştır.

### Fan Hız Kontrolü

Klimanın kapasitesini olumsuz yönde etkileyecek, hava debisinin fazla yada az olduğu özel durumlarda display de programlama menüsünden rakamsal değerlerde seçim yapılarak hava hızı arttırılabilir yada azaltılabilir.

### Çift oda sensörü

Lcd display ve anakart üzerindeki sensörlerin her ikisiyle de oda sıcaklığı kontrol edilebilir. Sensörlerin seçimi menüdeki parametrelerden yapılır. Fabrika ayarı olarak display sensörü seçilidir.

### LCD ekran ışık parlaklığı

Lcd ekranın ışık şiddetini dilerseniz sürekli tam açık dilerseniz 45 sn sonra otomatik olarak %65 oranında azalacak şekilde ayarlanabilir

5M

C

485

HPS LPS

AUTO

AUTO

AUTO

AUTO

3 min.

Cr

FAN SPEED

DS

AUTO

### Five Different Operating Mode

Our air conditioning units operate at five different modes; cooling, heating, automatic, fan and moist taking modes.

### Automation

Canbus automation software installed on our systems as the last control point for its operations enable the control of all units in the system from the main center.

### RS 485

It is possible to enable direct data transfer between the display and the main card by the RS 485 data transfer faster without mistakes.

### Gas Pressure Control

The pressure control equipments installed directly on the main card enables control of the critical gas pressure values which may have negative effect on the operations of the system.

### Water Pump Control

Water pump control is activated six seconds before the unit starts operating. It stops only six seconds after the unit stops. This control is ensured by the programming utility on the main card.

### Night Mode

This mode is to operate at sleeping mode for the bedrooms, providing comfort for our bodies during sleeping periods by changing room temperature automatically as programmed previously .

### Observation

On the display of our units there are eight special symbols shown each indicating the different electrical components and the sea water pump installed within. These symbols indicate each electrical component currently active on the circuit (cycle)

### Automatic Restart Function After Power Failures

On power failure previously selected automatic programs restart unchanged, soon after the power failure is over without any further need for reprogramming.

### Automatic Fan Speed Setting

The fan speed is set at three phases automatically by micro processing applications in order to enable heating at room temperature levels and to provide comfortable air flow within. (At the heating mode, there is a fourth phase for rotating the fan at air speed during starting.

### Automatic Heating Control

Our marine airconditioners continue to operate until the desired heating level is reached by measuring the room temperature automatically. Regardless of the weather conditions outside, they will keep the comfort inside at a constant level.

### Automatic Failure Notification

The display on the digital thermostat alerts automatically the failures on any part of the body by blinking coded error messages, simplfying the detection of the failure that needs to be fixed.

### 12 Hours on/of Programming

It is possible to adjust your unit with this programming mode to restart and stop at any desired time within a 12 hours time interval.

### 3 Minutes Automatic Security Function

This function will be automatically in effect for a 3 minutes time interval upon any unexpected powercuts, keeping your compessors and other parts at upmost security from malfunctioning and damages.

### Cooling/Heating

Provides not only the ideal healthy cooling but also the most economic heating with the heat pump at above 5 C sea water temperature.

### Chromium

All the fixing elements and accessories (such as screws, bolts etc) used during the production of our units are made from chromium material.

### Fan Speed Control

On the special conditions of having too much or inadequate air flows which may have negative effect on the units operations. The numeric values on the programming menu of the display can be altered by selecting the proper air flow values enabling increase or decrease of the current flow.

### Double room sensor

Room temperature can be controlled with both of the sensors at the LCD display and the main card. Selection of sensors can be done by fallowing the parameters on the menu. Factory set Unit will have display sensor initally.

### LCD display light setting

Yu can adjust the light strenght of the LCD display from full open to %65 less automatically if you wish, or keep it fully open as it is.

COOLMAR®

HVAC & R MARINE SYSTEM

www.coolmar.com.tr